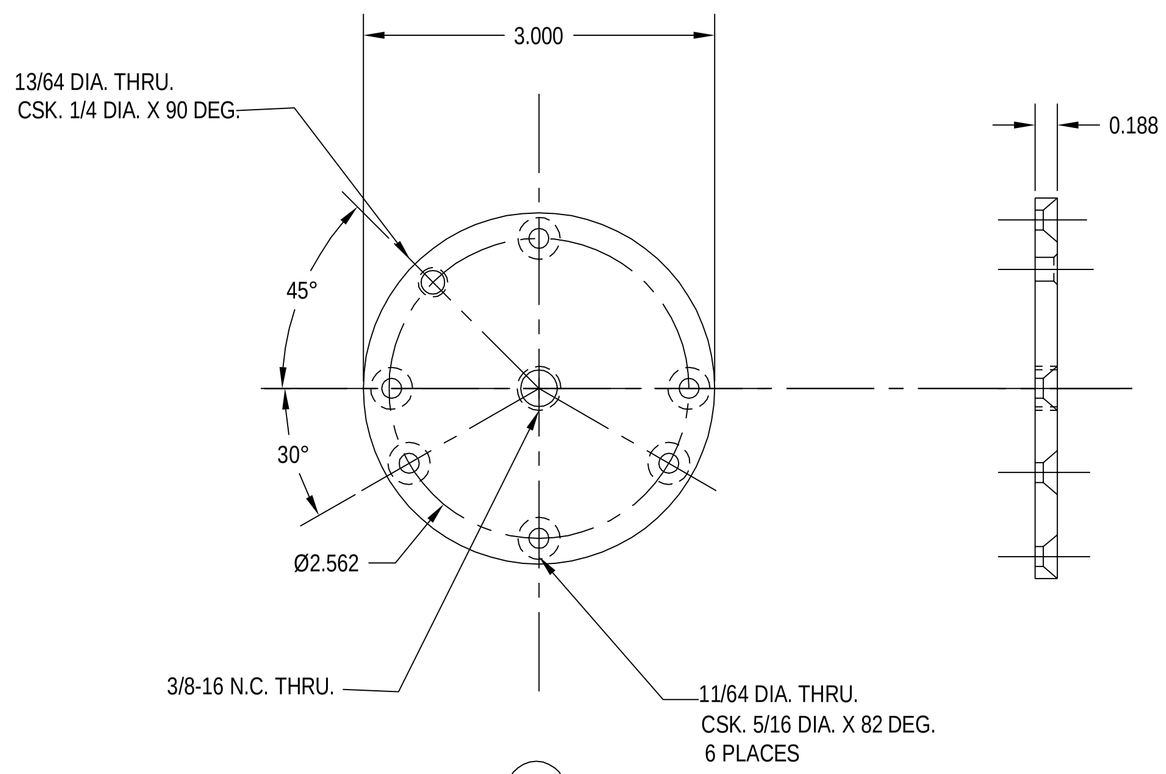

2 1 REQ.

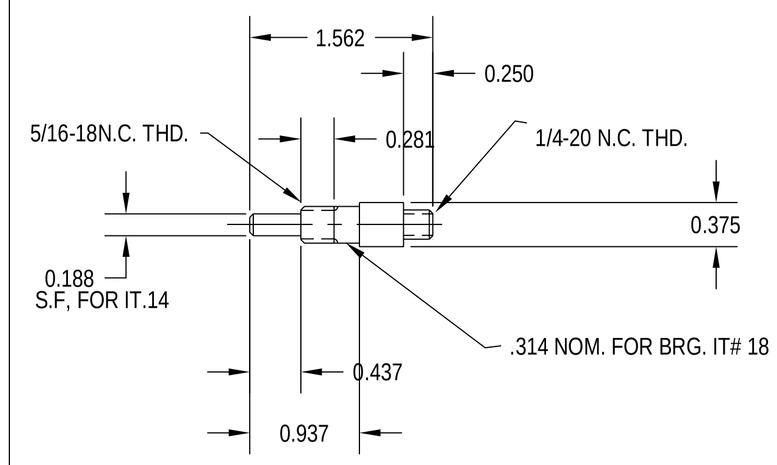

3 1 REQ.

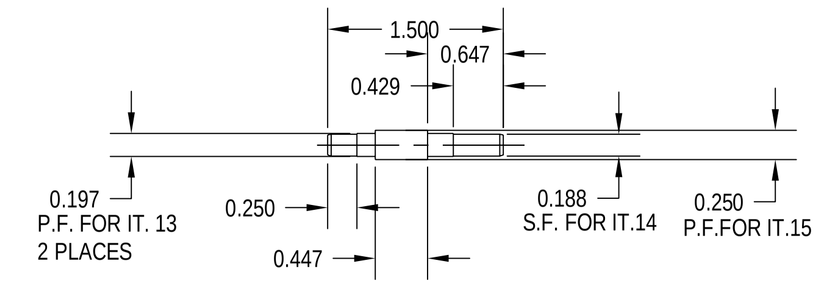

14 1 REQ.

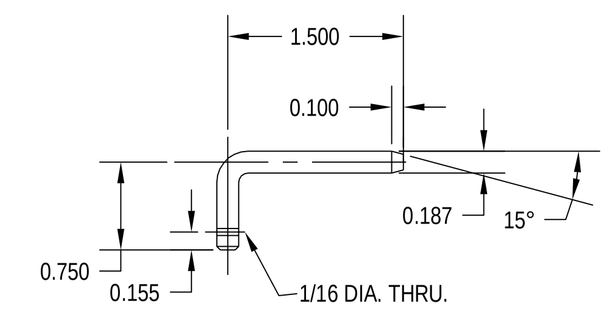

4 1 REQ.

NOTES.

1. SEE DWG.# 1022 SHEET 1 FOR ASSEMBLY.

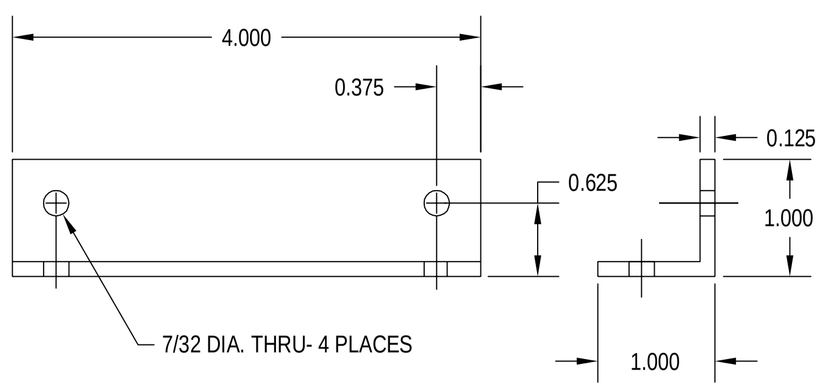

5 4 REQ.

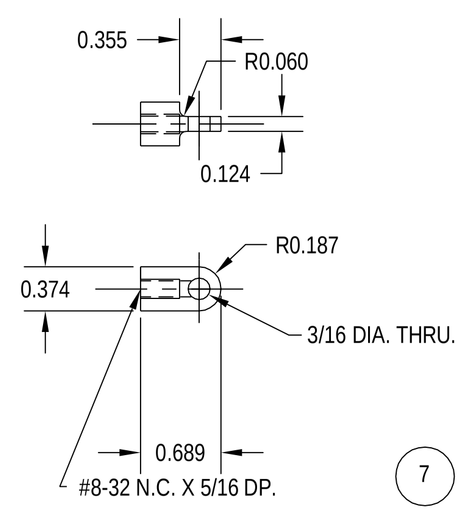

7 6 REQ.

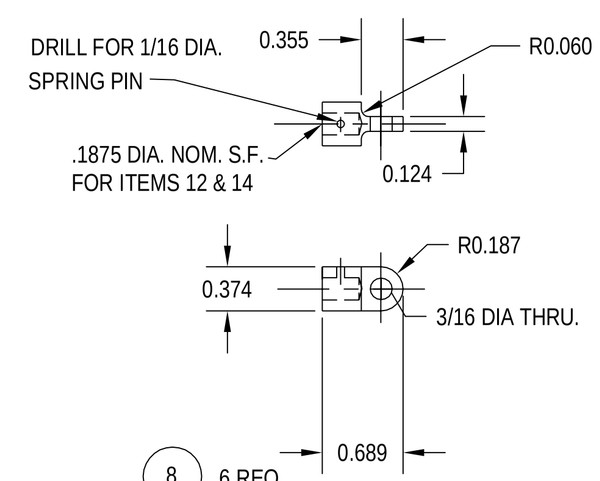

8 6 REQ.

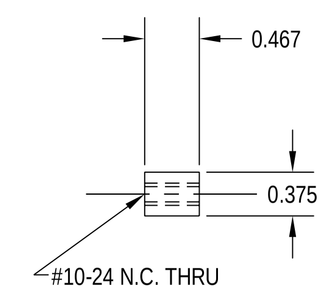

9 4 REQ.

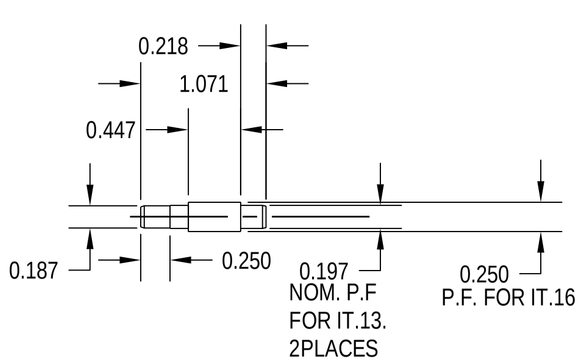

12 5 REQ.

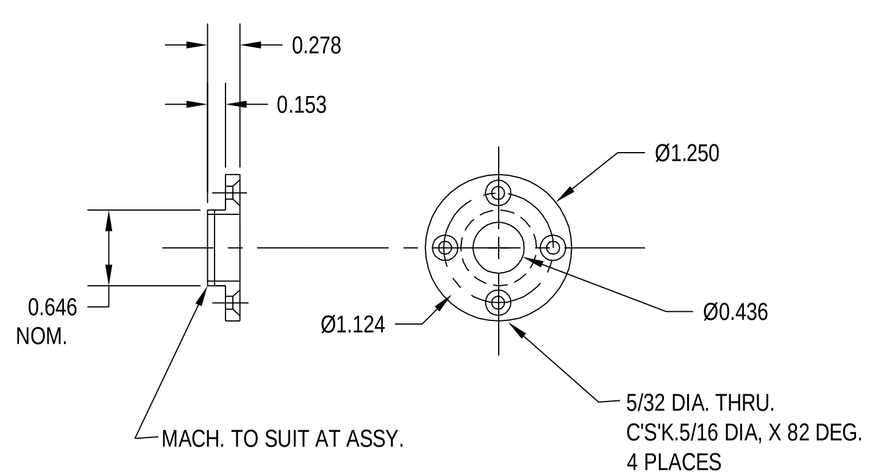

11 1 REQ.

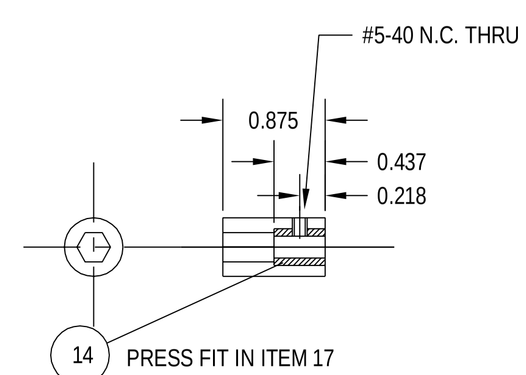

17 2 REQ.

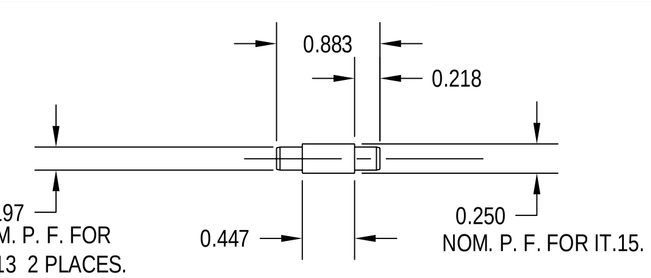

10 1 REQ.

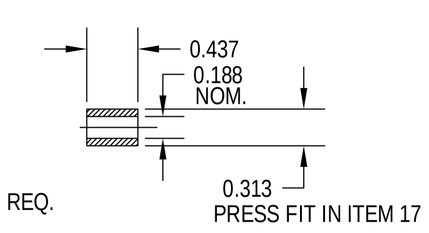

14 2 REQ.

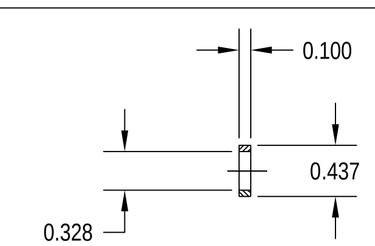

19 1 REQ.

REVISION	DESCRIPTION	DATE
A	REDESIGNED	14 APR. '03

DWG. TITLE.

ROPE WALK - DETAILS

DRAWN	DATE	SCALE	DWG. NO.	REV.
K.H.	OCT. 2002	FULL	1022 SHEET 2 OF 2	A